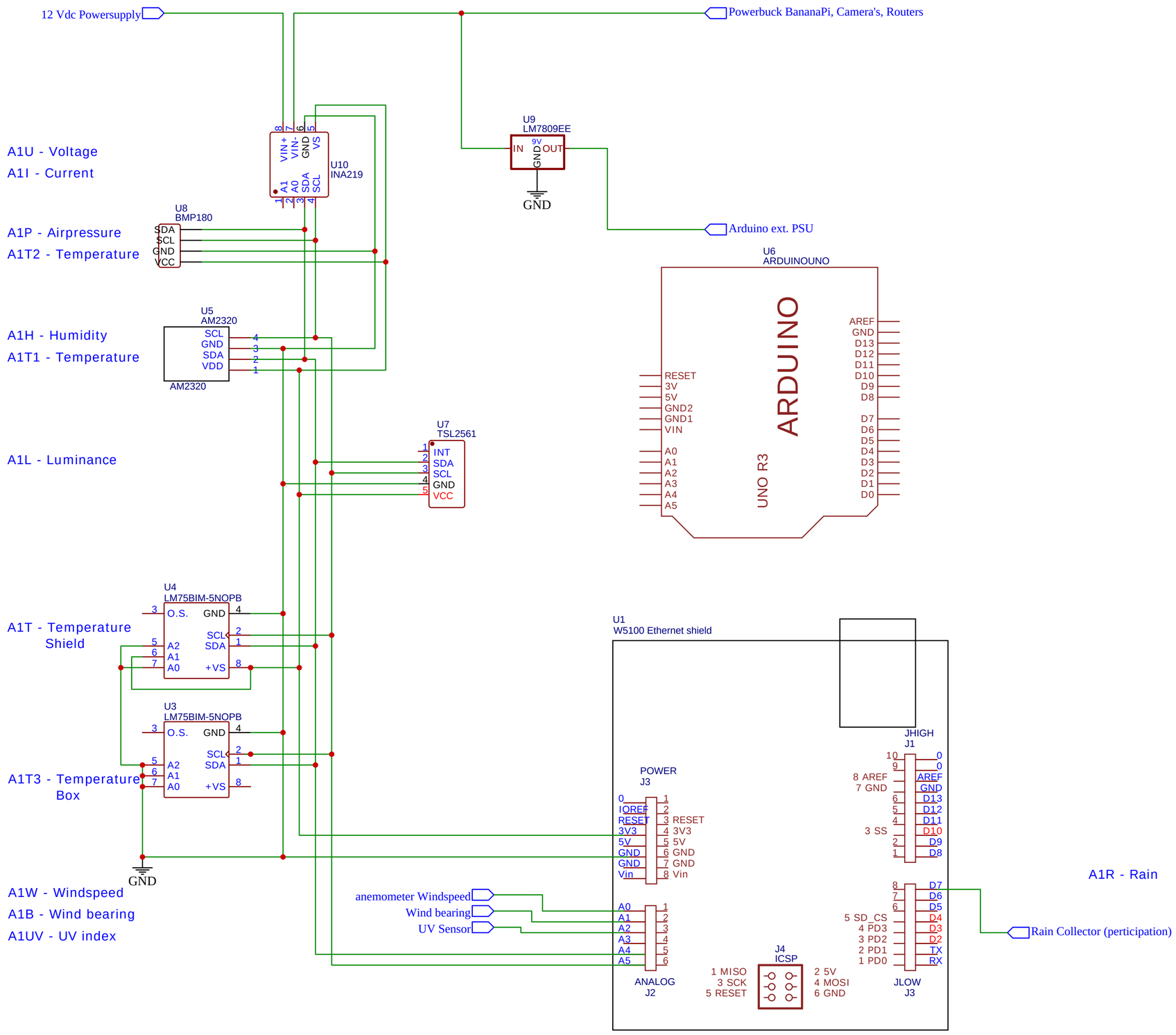

TITLE: Arduino weerstation buiten	REV: 1.0
Company:	Sheet: 1/1
Date: 2019-11-13 Drawn By: John Nieuwerth	

EasyEDA